Que! USB2/1.1

QUICK INSTALL

TECHNICAL SUPPORT

QPS TECHNICAL SUPPORT

Our Customer Support staff are ready to assist you with any problem you may have with your QPS Product.

There are many ways to contact QPS Technical Support.

E-Mail:	techsupport@qps-inc.com
World Wide Web:	http://www.qps-inc.com
Technical Support:	(714) 692-3588
Technical FAX:	(714) 692-5516

COPYRIGHT STATEMENT

Copyright © 1998-2001 QPS Professional Solutions. All rights reserved. No part of this publication may be reproduced or transmitted in any form by any means for any purpose without the prior written permission of QPS Inc.

Windows is a trademark of Microsoft Corporation.

All other brand and product names are trademarks or

registered trademarks of their respective owners.

COPYRIGHT PROTECTION NOTICE

Replicating copyrighted material without the permission of the publisher may be unlawful. QPS does not condone, support, or encourage the violation of copyright laws. Please obtain proper authorization prior to replicating copyright protected material.

Note: Please refer to the Que! USB 2 / 1.1 Installation Manual, located on your Installation disc.

CONGRATULATIONS!

Thank you for Choosing QPS!

In this manual, you'll find information designed to help you understand the capability of your new Que! USB 2 / 1.1 CD-RW drive as well as a step-by-step explanation of how to install your hardware and software.

WHAT YOU SHOULD HAVE!

What's in the Package

Refer to the provided package list on the following page and verify that you have received all of the appropriate parts. Okay, if all the right parts were in the package, then you just need to make sure your system will support the Que! USB 2/1.1 CD-RW Drive. Here's what you'll need:

System Requirements

USB 2.0 Performance

- 333 MHz processor or better
- MS Windows 2000
- Built in or add on USB 2.0 ports
- 128MB of RAM
- CD-ROM drive
- 70MB available hard drive space for software

USB 1.1 Performance

- 266MHz processor or better
- MS Windows 98SE or later
- Built-in or add on USB 1.1 ports
- 64MB of RAM
- CD-ROM drive
- 70MB available hard drive space for software

Note: If there is not an USB 2.0 port in your computer, you will need a separate USB 2.0 Controller Card (not included) to connect your Que! USB 2 / 1.1 CD-RW Drive.

PACKAGE LIST

Carrying Bag
& Strap

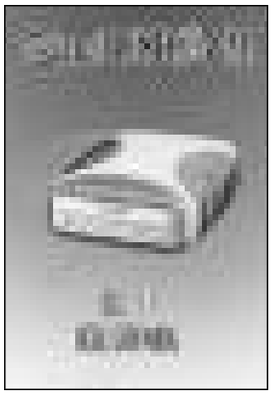

Installation
Manual

Drive

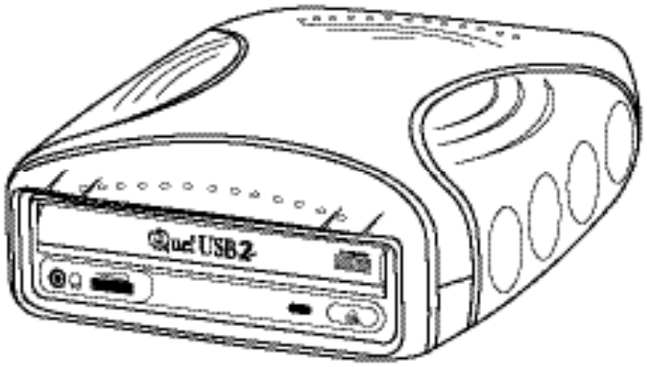

Universal Power
Supply Adapter

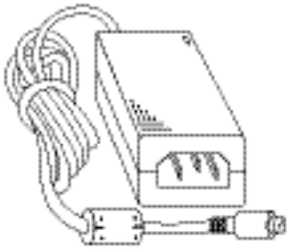

Power Cable

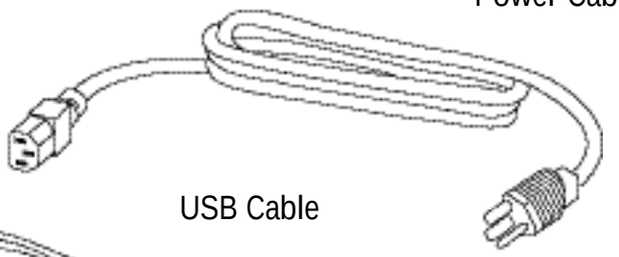

USB Cable

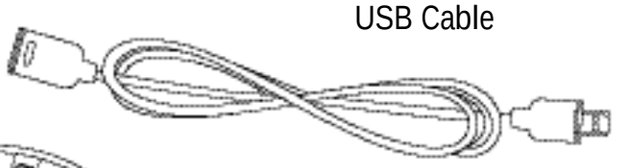

Software

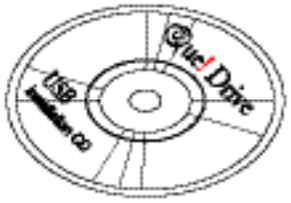

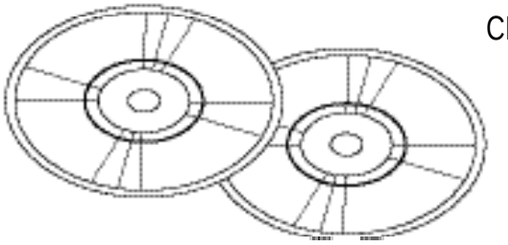

CD-R & CD-RW
Media

GETTING STARTED!

Before you start using your Que! USB 2/1.1 CD-RW Drive, you'll want to make sure you have everything you need. In this chapter, we'll tell you what comes in the package, so you can make sure it's all there. As well, in this chapter we'll tell you about the minimum requirements your system needs to support the Que! USB 2 / 1.1 CD-RW Drive.

What You Should Have!

Refer to the provided package list on page 3 and verify that you have received all of the appropriate parts. If all the right parts are in the package, then you just need to make sure your system will support the Que! USB 2 / 1.1 CD-RW Drive.

Note: Please refer to Que! M3 Installation Manual CD for complete installation version.

Verify that your systems is equipped with a high speed USB 2.0 interface. If your systems is equipped with a standard USB 1.1 interface only, you need to add a USB 2.0 interface to your system to guarantee the high speed rating performance of the QUE! USB 2/1.1 CD-RW drive on your system.

Step 1. Turn off the power on your PC and all other peripherals that are attached to your system.

Step 2. Connect the USB cable to the USB port on the back of your PC.

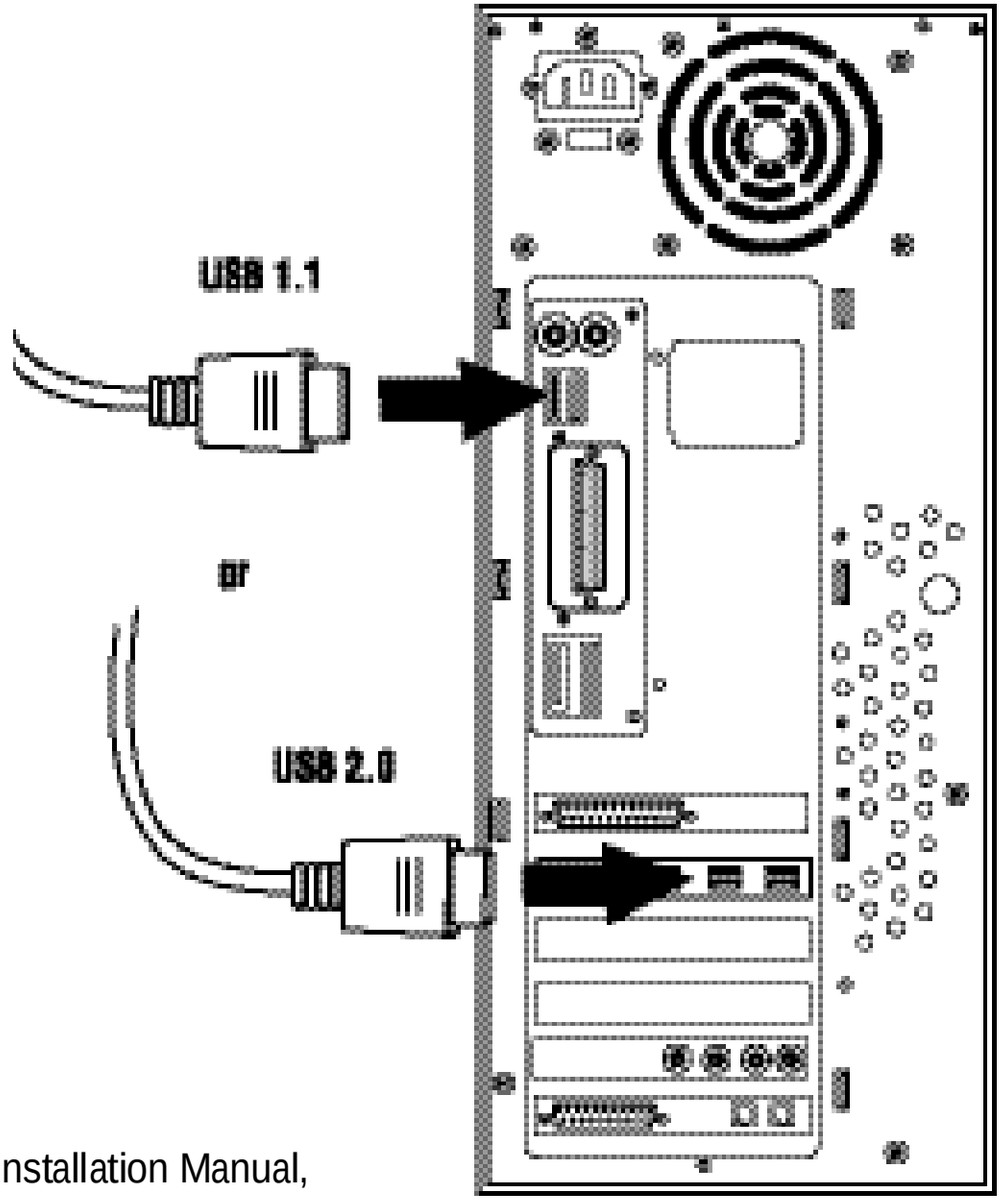

Note: Please refer to the Que! USB 2 / 1.1 Installation Manual, located on your Installation disc.

Step 3. Attach the other end of the USB interface cable to the USB port on the back of the Que! USB 2/1.1 Drive.

Step 4. Attach the power adapter to the back of the Que! USB 2/1.1 Drive. Plug one end of power cable to the back of the power adapter and the other end to the grounded power outlet.

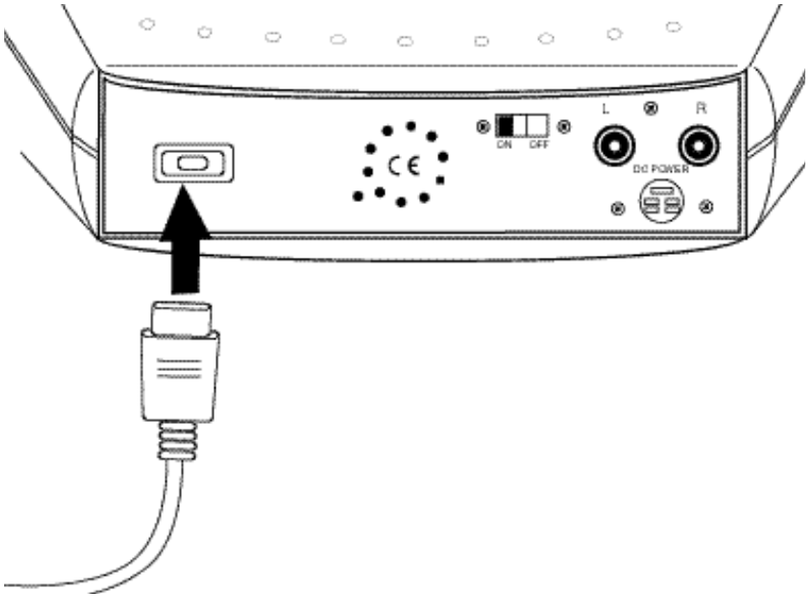

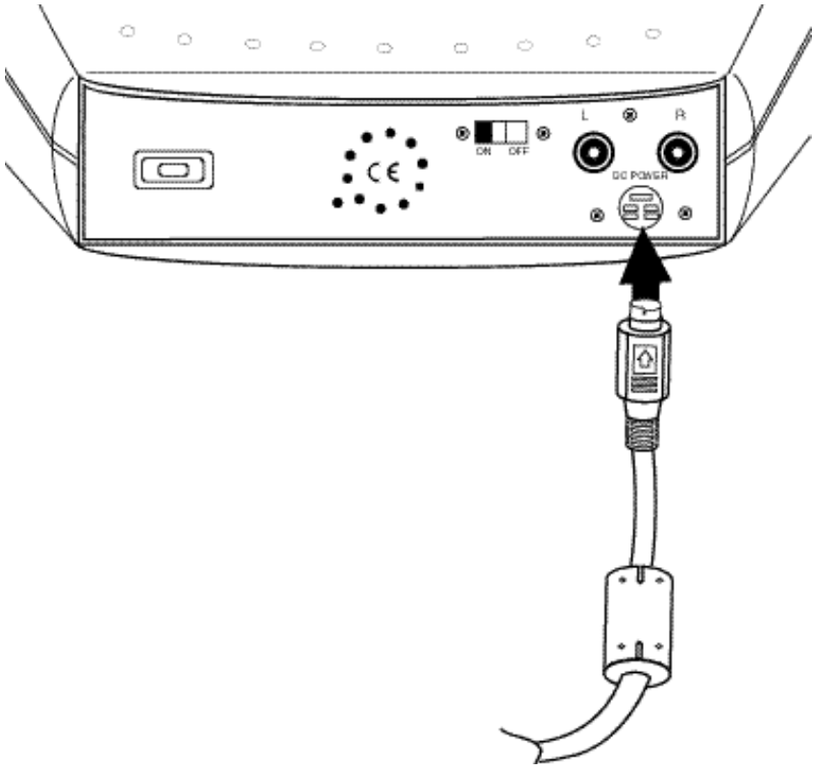

Step 5. Congratulations! To continue, refer to your software installation procedures on the following page.

Note: Please refer to the Que! USB 2 / 1.1 Installation Manual, located on your Installation disc.

USB 2 INSTALLATION

NOTE: Please be sure that your USB 2.0 Controller Card is installed correctly and functioning properly according to the manufacturers instructions and specifications prior to connecting the Que! USB 2 / 1.1 CD-RW drive.

Before you plug in your new Que! USB 2 / 1.1 CD-RW drive, you must run the "TPPINST.EXE" driver file installer. This file is located in the "Drivers" folder on your install CD that was in your kit. After installing the drivers, restart the system and plug in your new Que! USB 2 / 1.1 CD-RW drive.

Step 1. Plug the power adapter into the wall receptacle and into the back of the drive.

Step 2. Plug the USB cable into the USB 2.0 port on the back of your USB 2.0 Controller Card and into the port on the back of the drive.

Step 3. Let Windows 2000 detect your new Que! USB 2 / 1.1 CD-RW drive.

Step 4. Reboot your computer, this will only be necessary the first time you install the drive.

Step 5. Verify that your new Que! USB 2 / 1.1 CD-RW drive is available for use within the Windows operating system.

Step 6. Install the CD-Recording software that is supplied on your Install CD.

Note: Please refer to the Que! USB 2 / 1.1 Installation Manual, located on your Installation disc.

USB 1.1 INSTALLATION

NOTE: Please be sure that your on-board USB 1.1 port is installed correctly and functioning properly prior to connecting the Que! USB 2 / 1.1 CD-RW drive. Please remember that when connecting to the on-board USB port, your Que! USB 2 / 1.1 CD-RW drive will only be capable of speeds up to 4x max.

Before you plug in your new Que! USB 2 / 1.1 CD-RW drive, you must run the "TPPINST.EXE" driver file installer. This file is located in the "Drivers" folder on your install CD that was in your kit. After installing the drivers, restart the system and plug in your new Que! USB 2 / 1.1 CD-RW drive.

Step 1. Plug the power adapter into the wall receptacle and into the back of the drive.

Step 2. Plug the USB cable into the on-board USB 1.1 port on the back of your computer system then into the port on the back of the drive.

Step 3. Let Windows detect your new Que! USB 2 / 1.1 CD-RW drive.

Step 4. Reboot your computer, this will only be necessary the first time you install the drive.

Step 5. Verify that your new Que! USB 2 / 1.1 CD-RW drive is available for use within the Windows operating system.

Step 6. Install the CD-Recording software that is supplied on your Install CD.

Note: Please refer to the Que! USB 2 / 1.1 Installation Manual, located on your Installation disc.

In this section, we'll explain how to install the recording software packages that came with your Que! USB 2.0 / 1.1 Drive.

PART 1. INSTALLING THE NERO SOFTWARE:

Step 1. Insert the installation CD in your computer's CD-ROM drive. The installation wizard "**Ahead Installer**" will start up automatically.

Step 2. Select "Nero" to start installing the program. When you do that the Nero window will pop up. Choose "**Next**".

Step 3. At the software license agreement screen choose if you accept the terms of the license agreement or not then choose "**Next**" to continue if you agree with the terms.

Step 4. You must complete the Name and Serial Number sections, the Organization section is optional. The serial number is provided with the CD, Choose "**Next**" to continue.

Step 5. The next screen is the "**Setup Type**" screen, this where you choose to install a "**Typical**", "**Compact**" or "**Custom**" setup depending on your preferences. If you wish to install this software to another location other than the default on your "**C:**" drive, select the "**Custom**" option to choose your location of install. Select the setup option that best fits your needs then choose "**Next**" to continue.

Step 6. The Wizard is now ready to install your software, click "**Install**" to start the installation.

Note: Please refer to the Que! USB 2 / 1.1 Installation Manual, located on your Installation disc.

Step 7. Once Wizard is finished installing your new software, you will need to choose "**Finish**" to close the installer.

*The Nero Media Player is not required for recording functionality, it is for playback use only. The software does not need to be installed, you may install if it you wish.

PART 2. INSTALLING THE INCD / PACKET WRITING SOFTWARE:

Step 1. From the "**Ahead Installer**" screen select " **InCD / Packet-Writing** " to begin the InCD installation wizard.

Step 2. Choose "**Install InCD**".

Step 3. At the software license agreement screen choose if you accept the terms of the license agreement or not then choose "**Next**" to continue if you agree with the terms.

Step 4. Enter your User name and Company name(Optional) and change the installation location(if desired) then choose "**Next**" to continue.

Step 5. Choose "**Exit**" to leave the "**Ahead Installer**", then restart you computer.

Note: Please refer to the Que! USB 2 / 1.1 Installation Manual, located on your Installation disc.

MEDIA INSERTION AND REMOVAL

1. To insert the CD-ROM, CD-R or CD-RW disc, press the EJECT button.

2. Once the disc tray has fully extended, place the CD-ROM, CD-R or CD-RW disc into the center of the tray.

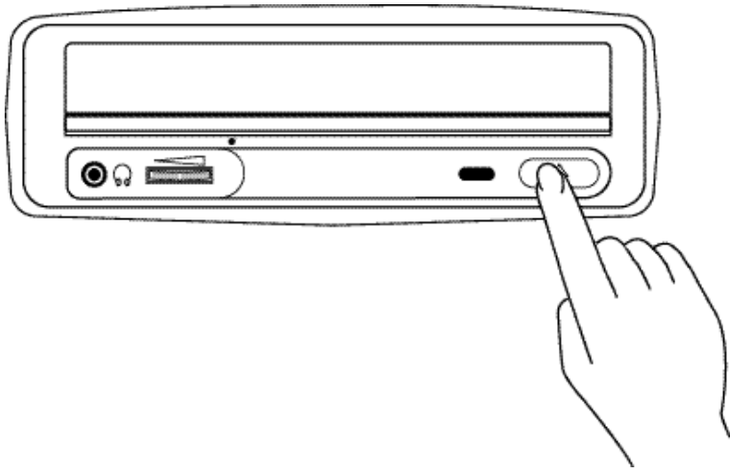

Note: The disc surface must be clean and the label should be facing upward.

3. Press the eject button to have the drive accept the CD-ROM, CD-R or CD-RW disc.

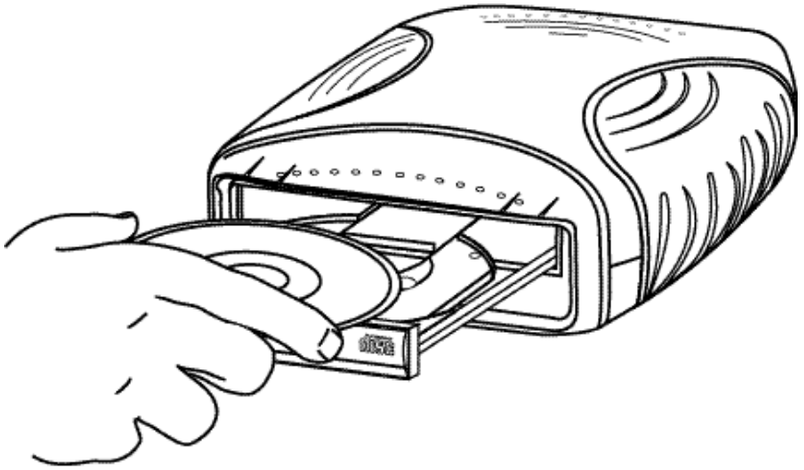

Note: Please refer to the Que! USB 2 / 1.1 Installation Manual, located on your Installation disc.

4. The busy LED will light for a few seconds to indicate that a disc has been loaded and the drive has accepted the disc

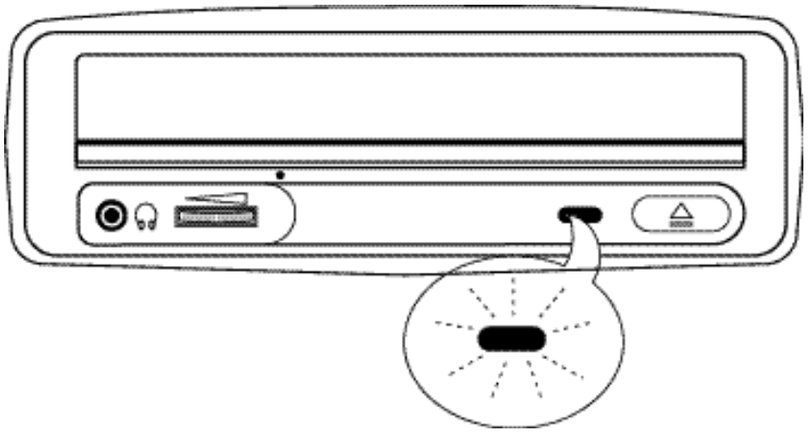

5. To eject and insert the disc, press the EJECT button.

Note: Some software prohibits the use of the EJECT button, so a disc cannot be ejected in this way. Please refer to the instructions supplied with your software.

6. Once it has been ejected, remove the disc by hand and return it to its jewel case.

Note: The disc cannot be ejected while the drive is reading or writing a disc.

Note: Please refer to the Que! USB 2 / 1.1 Installation Manual, located on your Installation disc.

CARE IN HANDLING

The NUMBER ONE cause of premature disc failure with recordable CDs is contamination of the recording surface before recording is completed. To minimize disc failure, use the following disc-handling guidelines.

- Keep the media in its sealed package until you are ready to record.
- Keep the disc as clean and dust-free as possible. DO NOT touch the recording surface, and do not expose the disc to dust or dirt.

- DO NOT BLOW ON THE DISC to remove dust or dirt. To remove dust from the recording surface use a camera lens cleaner, a lint free cloth or use compressed air. Wipe the disc from the center to the outer edge. NEVER wipe the disc in a circular motion.
- Always record in a dust-free environment. If the disc is to be removed from the CD-RW drive, store the disc in a clean, dust-free environment.

- Never bend or flex the disc. This may warp the disc and leave it unusable.
- Never scratch off the reflective top surface of a CD-R or CD-RW disc. Without the reflective surface the disc is completely unusable.
- If you must write on the CD-R disc surfaced, read the back of the CD-R jewel case for instructions.

Note: Please refer to the Que! USB 2 / 1.1 Installation Manual, located on your Installation disc.

QUALITY PERFORMANCE SERVICE

QPS Inc.
8015 East Crystal Drive
Anaheim, CA 92807
http://www.qps-inc.com

For Customer Use:

Enter below the Model Number and Serial Number which are located either on the rear, bottom or side of the unit.

Model No._____

Serial No._____

Appearance and specifications of the actual mechanism could differ based on your order.